Nightingale

User Handbook



Overtime

6800ti Series

Thank you for choosing Nightingale.

Proudly designed and manufactured in Canada since 1928, every Nightingale chair reflects nearly a century of craftsmanship, thoughtful innovation, and dependable performance. We hope it supports your work comfortably and reliably for years to come.

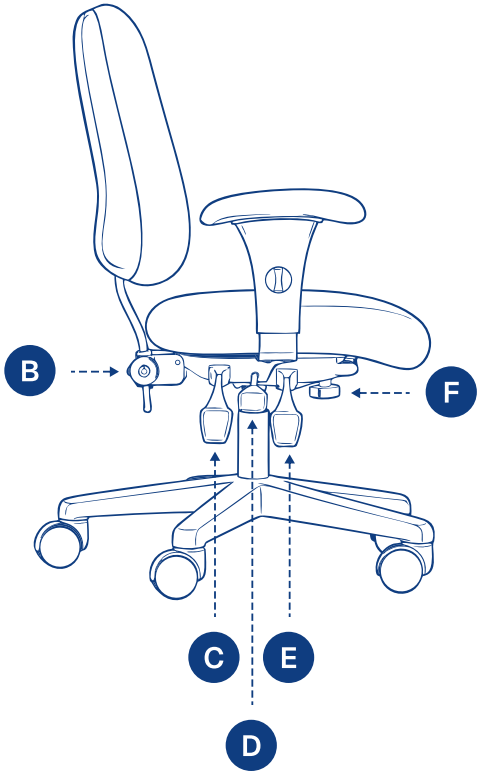

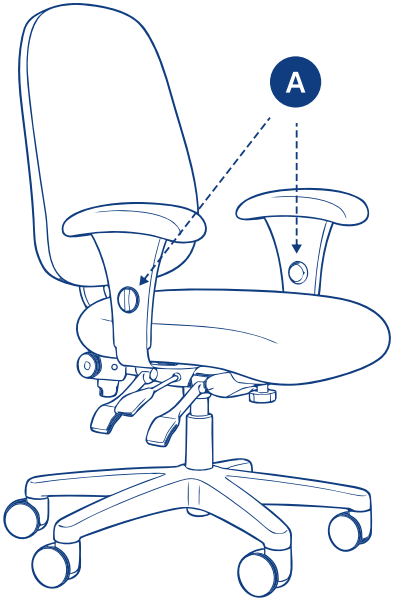



6800ti



6800Dti



A Arm Height & Width Adjustment

Turn the knob clockwise to raise the arm or counter-clockwise to lower it. To adjust the width, loosen the knob, pull the arm to the desired position, and retighten.



B Back Height Adjustment

Turn the knob counter-clockwise to loosen it. Raise or lower the chair back to the desired lumbar position, then retighten the knob.

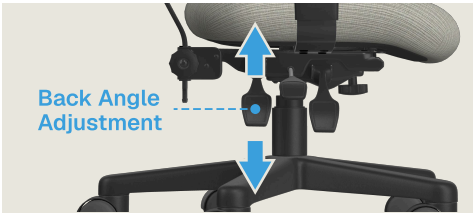

C Back Angle Adjustment

While seated, pull the paddle up and adjust the back to the desired angle. Push the paddle down to lock it in position.

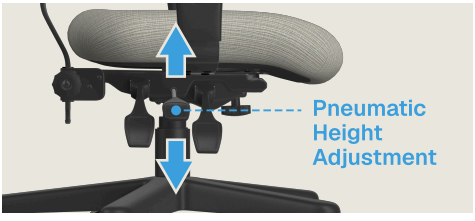

D Pneumatic Height Adjustment

To lower the seat, lift the paddle while seated. To raise it, lift the paddle with your weight off the seat.

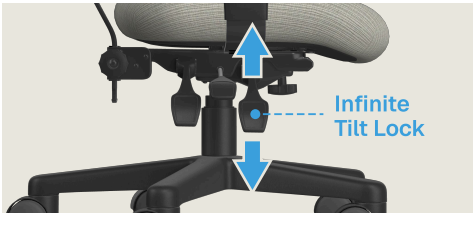

E Infinite Tilt Lock

Push the paddle down to lock the chair in position. Pull the paddle up to allow free movement.



F Tension Knob

Turn the knob clockwise to increase tilt tension or counter-clockwise to decrease it.

Care Instructions

With regular care and maintenance, your chair will provide many years of superior performance and satisfaction. To maintain the quality of your Nightingale product, please follow the cleaning instructions outlined here.

Mechanism
Once a year, lubricate the mechanism using light sewing-machine oil or a similar product. Use the plastic straw attached to the sprayer. To prevent dripping and possible damage to surrounding surfaces, avoid over-lubrication.

Fabric
Clean with mild detergent and water applied with a clean damp cloth or sponge. Rinse with a damp (water) cloth and let dry. Never use hot water and avoid scrubbing. Use gentle movements.

Plastic Parts
To clean, spray with a mild detergent and wipe it clean with a cloth dampened with water. Do not use abrasives or excessive amounts of cleaner.

Frame
Powder-coated frames can be cleaned by wiping with a damp cloth and any mild detergent.

Warranty and Care
For complete warranty coverage, terms, exclusions, and product care information, please visit www.nightingalechairs.com



www.nightingalechairs.com
2301 Dixie Road, Mississauga, ON, Canada L4Y 1Z9